YANMAR

PARTS CATALOG

0CD11-M18000EN

Last update Apr., 2019

PREFACE

1. This parts catalog is the 1st edition of 3TNM68-ASGS for SAWAFUJI ELECTRIC CO.,LTD.

Pub. No. : 0CD11-G18000
Published : January, 2013

2. Model name

Engine model	Vehicle	Vehicle made by
3TNM68-ASGS	GENERATOR	SAWAFUJI ELECTRIC CO.,LTD.

Directions for the Parts Catalog.

1.This Parts Catalog shows both standard and optional parts.
2.Parts may change without prior notice.
3.The following is an example of the Parts Catalog format.

0CF10-G21601 29. FUEL INJECTION PUMP(W/BOOST)

(A)=4JH-DT
(B)=4JH-DTZ
(C)=4JH-DTZP
(D)=4JH-DTZA
(E)=4JH-DTZY
(F)=

① REF.	② LEV.	PARTS NO.	DESCRIPTION	Q'TY (A)	(B)	(C)	(D)	(E)	(F)	③ I	⑤ R
1	1	729595-51390	FUEL INJECTION PUMP	1	1	1	1	1			1
1-1	1	729595-51391	FUEL INJECTION PUMP	1	1	1	1	1		N	1
	(A=E00185)	(B=E00200)									
3	2	26022-060162	SCREW M 6X 16	9	9	9	9	9			
3-1 ④	2	26022-060162	SCREW M 6X 16	4	4	4	4	4		K	
	(A=E00156)	(B=E00156)	(C=E00156) (D=E00156)	(E=E00156)							
4	2	129470-51040	CAMSHAFT	1	1	1	1	1			
5	2	122710-51050	BEARING, ROLLER	2	2	2	2	2			
6	2	129470-51060	RETAINER	1	1	1	1	1			

Remarks
(1) BOOST COMPEMSATOR TYPE. OPTIONAL PART, TO E00155,(4JH-DT, 4JH-DTZ

①Ref. No.

The Ref. No. listed may not be in accordance with the illustration Ref. No.

(Ex.) Illustration No. 1 List Ref No. 1 (Before change) → 1- 1 (After change)

For interchangeable symbols N, R and K, illustrations for new parts may be abbreviated.

②Lev. (Level)

Level indication
The numbers below indicate the level of relativity towards the main part.
1 ----- Main parts (Assembly parts)
2 ----- Sub component included in " 1 ".
3 ----- Sub component included in " 2 ".
Note) Parts that are not for sale are partially illustrated but not listed.

③Interchangeability Symbol

When a part change takes place, one of the following interchangeability symbols is indicated beside the part.

Symbol	Interchangeability	Contents note
N	Old ← Yes / No → New	New Part is interchangeable for Old Part but Old Part is not interchangeable for New Part.
Q	Old ← No / Yes → New	New Part is not interchangeable for Old Part but Old Part is interchangeable for New Part.
R	Old ← Yes / Yes → New	New/ Old Parts are both interchangeable.
S	Old ← No / No → New	New/ Old Parts are both not interchangeable.
W		Part newly added.
Z		Part discontinued.
F		Not interchangeable by a single part but interchangeable together with related parts.
K		Changes only for used parts quantities.

④Effective Machine No.

When a part changes, the effective Machine No. will be indicated in the (A)-(F) column.

Product Symbol	Product No.	Product Symbol	Product No.
C	Clutch No. Compressor No.	F	Machine No. (Agricultural Equip.)
D	Drive No.	M	Machine No.
E	Engine No.		

Note 1) A date may follow the symbol. (Ex.) 1996.01
Note 2) " XXXXX " and " ZZZZZ " are for parts that could not be predicted or for engine models that could not be identified.
Note 3) (A=E00185) is the E (Engine Serial Number) for the column (A) model (in this case 4JH-DT) after the parts design change.

⑤Remarks

Figures or alphabets (symbols) are entered in the remarks column.
The comments (remarks) on parts that are indicated at the bottom of the illustration are the same symbols as those stated above.

Contents

0CD11-M18000

Fig. No.	Fig. Name
3TNM68-ASGS	
1.	CYLINDER BLOCK
2.	GEAR HOUSING
3.	FLYWHEEL HOUSING & OIL SUMP
4.	CYLINDER HEAD & BONNET
5.	AIR CLEANER
6.	EXHAUST MANIFOLD & SILENCER
7.	CAMSHAFT & DRIVING GEAR
8.	CRANKSHAFT & PISTON
9.	LUB. OIL SYSTEM
10.	COOLING WATER SYSTEM
11.	FUEL INJECTION PUMP
12.	GOVERNOR
13.	FUEL INJECTION VALVE
14.	FUEL FILTER
15.	STARTING MOTOR
16.	GENERATOR
17.	GASKET SET

Fig.1. CYLINDER BLOCK

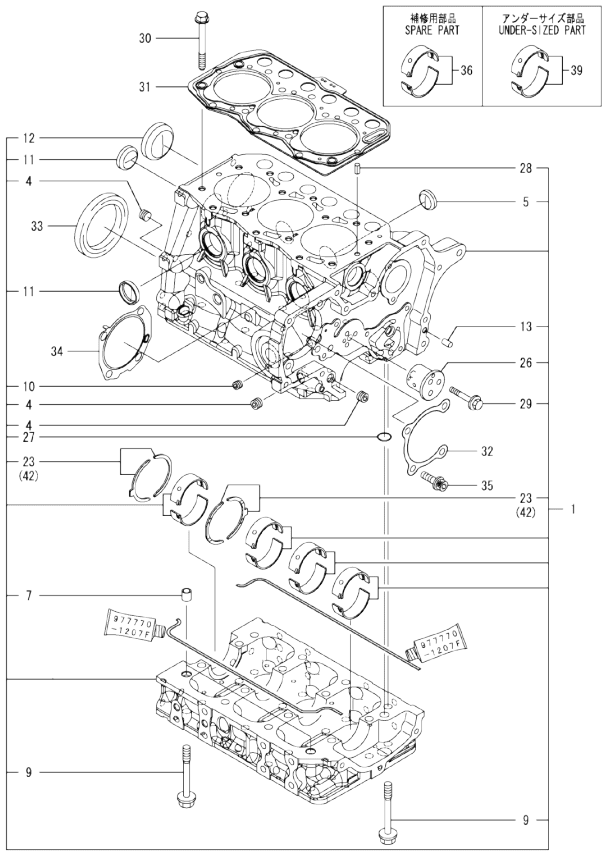

Remarks
(1)Spare parts.
(2)Under-sized(U.S.=0.25)part.
(3)Over-sized(O.S.=0.25)part.

(A)=3TNM68-ASGS
(B)=
(C)=
(D)=
(E)=
(F)=

No.	Lev.	Parts No.	Description	Q'ty (A)	(B)	(C)	(D)	(E)	(F)	I	R
1	1	119127-01560	BLOCK ASSY, CYLINDER	1							
4	2	124060-01050	PLUG, PT1/8	3							
5	2	119125-01970	PLUG, 25	3							
7	2	119125-01960	PIPE, KNOCK	2							
9	2	119125-02061	BOLT, METAL CAP	16							
10	2	23876-005000	PLUG, R005	1							
11	2	27241-300000	PLUG 30	4							
12	2	27241-450000	PLUG, 45	1							
13	2	119620-01620	PIN, M6X10	2							
23	2	119125-02930	BEARING, THRUST	2							
26	2	119125-25050	SHAFT, IDLE GEAR	1							
27	2	129900-32040	O-RING, P14	1							
28	2	22351-060012	PIN, SPRING 6.0X12	2							
29	2	26106-060402	BOLT, M6X 40 PLATED	3							
30	1	119266-01200	BOLT, HEAD	14							
31	1	119125-01330	GASKET, HEAD	1							
32	1	119125-01790	GASKET	1							
33	1	119734-02220	SEAL, OIL	1							
34	1	119125-51800	GASKET	1							
35	1	119125-01800	BOLT	4							
36	1	119125-02900	BEARING, MAIN	4							1
39	1	119125-02910	BEARING, 0.25 US	4							2
42	1	119125-02940	BEARING, THRUST 0.25	2							3

N:Old ◄Yes/No► New. Q:Old ◄No/Yes► New, R:Old ◄Yes/Yes► New, S:Old ◄No/No► New, W:Add, Z:Discontinued, F:Interchangeable by set, K:Q'ty Change

Copyright (C) YANMAR CO., LTD. All RightsReserved.

Fig.2. GEAR HOUSING

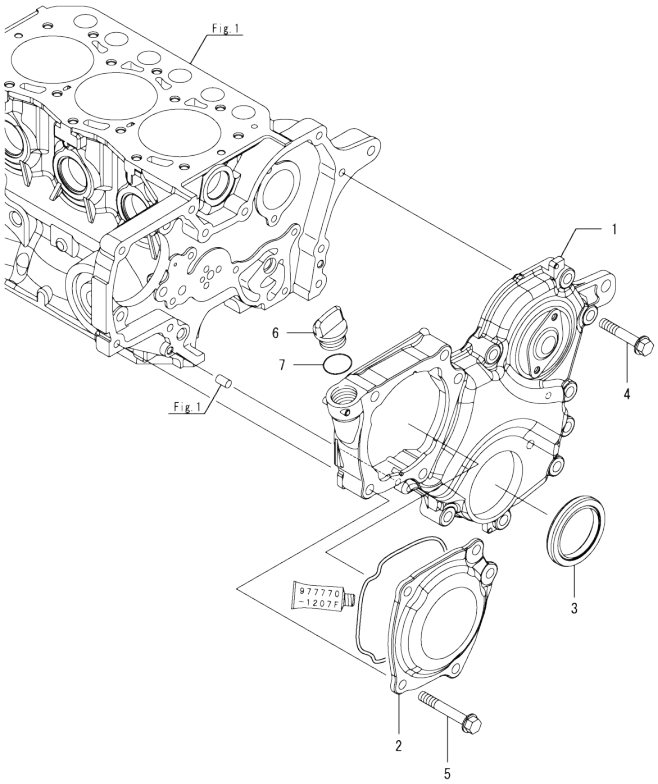

(A)=3TNM68-ASGS (D)=
(B)= (E)=
(C)= (F)=

No.	Lev.	Parts No.	Description	Q'ty (A)	(B)	(C)	(D)	(E)	(F)	I	R
1	1	119125-01500	COVER, GEAR CASE	1							
2	1	119125-01750	COVER	1							
3	1	119717-01800	SEAL, OIL	1							
4	1	26106-080352	BOLT, M8X 35 PLATED	8							
5	1	26106-080452	BOLT, M8X 45 PLATED	5							
6	1	106760-01770	CAP	1							
7	1	24311-000180	O-RING, 1AP18.0	1							

N:Old ←Yes/No→ New. Q:Old ←No/Yes→ New. R:Old ←Yes/Yes→ New. S:Old ←No/No→ New. W:Add. Z:Discontinued. F:Interchangeable by set. K:Q'ty Change

Copyright (C) YANMAR CO., LTD. All RightsReserved.

Fig.3. FLYWHEEL HOUSING & OIL SUMP

(A)=3TNM68-ASGS
(B)=
(C)=
(D)=
(E)=
(F)=

No.	Lev.	Parts No.	Description	Q'ty (A)	(B)	(C)	(D)	(E)	(F)	I	R
1	1	129100-01580	PIN, PARALLEL 8X16	2							
2	1	119128-01640	HOUSING, FLYWHEEL	1							
2-1	1	119128-01660	HOUSING, FLYWHEEL	1						F	1
	(A=E024780)										
3	1	119620-01750	CAP, WHEEL COVER	1							
4	1	26206-100252	BOLT, M10X 25 PLATED	8							
5	1	119125-01760	OIL PAN ASSY	1							
6	2	105425-01690	PLUG, DRAIN M16	1							
8	2	22190-160002	WASHER, SEAL 16	1							
9	1	119125-01780	BOLT, TORX M6X10	14							
10	1	183366-08351	NIPPLE, DRAIN	1							
11	1	119446-39100	PIPE, OIL DRAIN	1							
12	1	22190-160002	WASHER, SEAL 16	1							
13	1	23000-022000	CLAMP, 22	2							

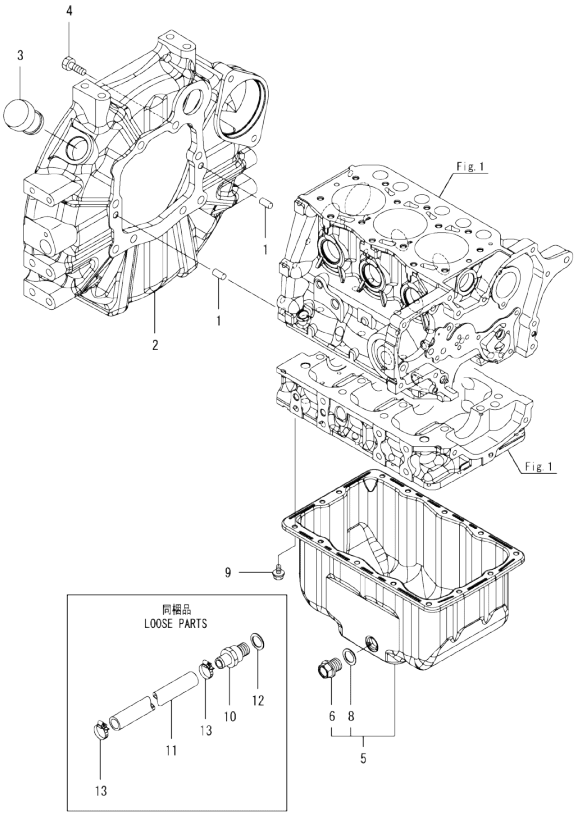

Remarks
(1)Fig.15 No.1-1 interchangeable by set.

N:Old ◄Yes/No► New. Q:Old ◄No/Yes► New. R:Old ◄Yes/Yes► New. S:Old ◄No/No► New. W:Add. Z:Discontinued. F:Interchangeable by set. K:Q'ty Change

Copyright (C) YANMAR CO., LTD. All RightsReserved.

Fig.4. CYLINDER HEAD & BONNET

(A)=3TNM68-ASGS
(B)=
(C)=
(D)=
(E)=
(F)=

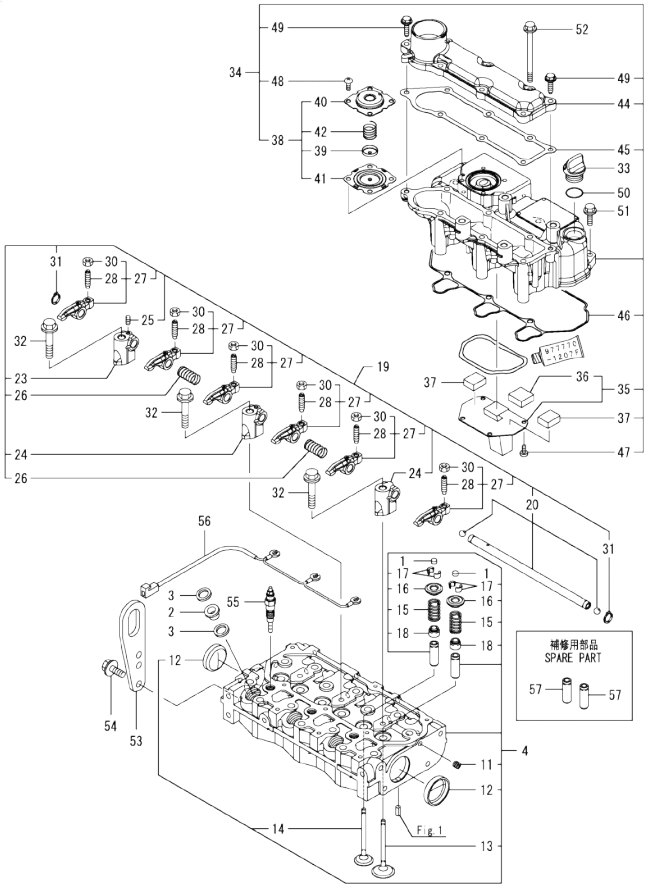

No.	Lev.	Parts No.	Description	Q'ty (A)	(B)	(C)	(D)	(E)	(F)	I	R
1	1	119260-11370	CAP, VALVE	6							
2	1	129901-11450	PROTECTOR, NOZZLE	3							
3	1	119600-11460	GASKET, NOZZLE	6							
4	1	119125-11740	HEAD ASSY, CYLINDER	1							
11	2	23876-005000	PLUG, R005	1							
12	2	27241-350000	PLUG, 35	2							
13	2	119125-11100	VALVE, INTAKE	3							
14	2	119125-11110	VALVE, EXHAUST	3							
15	2	119125-11130	SPRING, VALVE	6							
16	2	119125-11180	RETAINER, SPRING	6							
17	2	119125-11190	COTTER	12							
18	2	119125-11340	SEAL, VALVE STEM	6							
19	1	119125-11200	SUPPORT ASSY, ARM	1							
20	2	119125-11240	SHAFT ASSY, ROCKER	1							
23	2	119125-11260	SUPPORT, ROCKER ARM	1							
24	2	119125-11270	SUPPORT, ROCKER ARM	2							
25	2	119260-11270	SCREW	1							
26	2	119260-11280	SPRING	2							
27	2	119125-11650	ARM, ROCKER	6							
28	3	105010-11230	SCREW, VALVE ADJUST	6							
30	3	26856-060002	NUT, M6	6							
31	2	22242-000100	RING, 10	2							
32	1	26106-080452	BOLT, M8X 45 PLATED	3							
33	1	106760-01770	CAP	1							
34	1	119125-11380	BONNET ASSY, HEAD	1							
35	2	119717-03031	PLATE	1							
36	3	119717-03070	BAFFLE, BREATHER	1							
37	2	119717-03070	BAFFLE, BREATHER	2							
38	2	119802-03100	DIAPHRAGM ASSY	1							
39	3	119802-03110	PLATE	1							
40	3	119802-03121	COVER, DIAPHRAGM	1							
41	3	119802-03131	DIAPHRAGM	1							
42	3	119802-03141	SPRING, DIAPHRAGM	1							
44	2	119125-11320	COVER, BONNET	1							
45	2	119125-11330	GASKET	1							
46	2	119125-11370	GASKET, BONNET	1							
47	2	22857-500100	SCREW, 5X10	4							
48	2	22857-500100	SCREW, 5X10	4							
49	2	26476-060202	SCREW, TAPPING M6X20	2							
50	1	24311-000180	O-RING, 1AP18.0	1							
51	1	26106-060202	BOLT, M6X 20 PLATED	3							
52	1	26106-060802	BOLT, M6X 80 PLATED	6							
53	1	119226-07900	LIFTER	1							
54	1	26106-080162	BOLT, M8X 16 PLATED	2							
55	1	119125-77800	PLUG, GLOW	3							
56	1	119125-77820	CONNECTOR, GLOW PLUG	1							
57	1	119125-11800	GUIDE, VALVE	6							1

Remarks
(1)Spare parts.

N:Old ←Yes/No→ New. Q:Old ←No/Yes→ New. R:Old ←Yes/Yes→ New. S:Old ←No/No→ New. W:Add. Z:Discontinued. F:Interchangeable by set. K:Q'ty Change

Copyright (C) YANMAR CO., LTD. All RightsReserved.

Fig.5. AIR CLEANER

(A)=3TNM68-ASGS
(B)=
(C)=
(D)=
(E)=
(F)=

No.	Lev.	Parts No.	Description	Q'ty (A)	(B)	(C)	(D)	(E)	(F)	I	R
1	1	119128-12050	PIPE, AIR INTAKE	2							
2	1	119515-12530	CLEANER ASSY, AIR	1							
3	2	119808-12540	VALVE, UNLOADER	1							
4	2	119655-12560	ELEMENT	1							
5	2	119336-12570	COVER ASSY	1							
6	2	105027-12580	RING	1							
7	2	129612-12650	LABEL, MARKING	1							
8	2	126650-12680	INDICATOR	1							
9	2	119233-12700	ELEMENT	1							
10	1	23000-060000	CLAMP, 60	3							

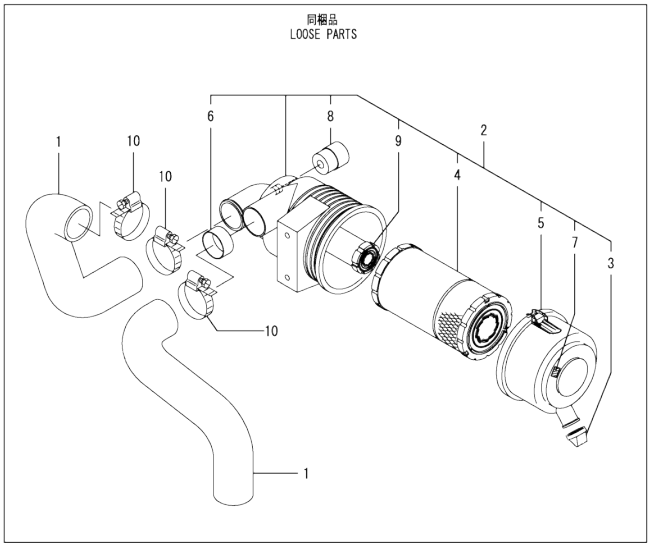

N:Old ←Yes/No→ New. Q:Old ←No/Yes→ New. R:Old ←Yes/Yes→ New. S:Old ←No/No→ New. W:Add. Z:Discontinued. F:Interchangeable by set. K:Q'ty Change

Copyright (C) YANMAR CO., LTD. All RightsReserved.

Fig.6. EXHAUST MANIFOLD & SILENCER

(A)=3TNM68-ASGS (D)=
(B)= (E)=
(C)= (F)=

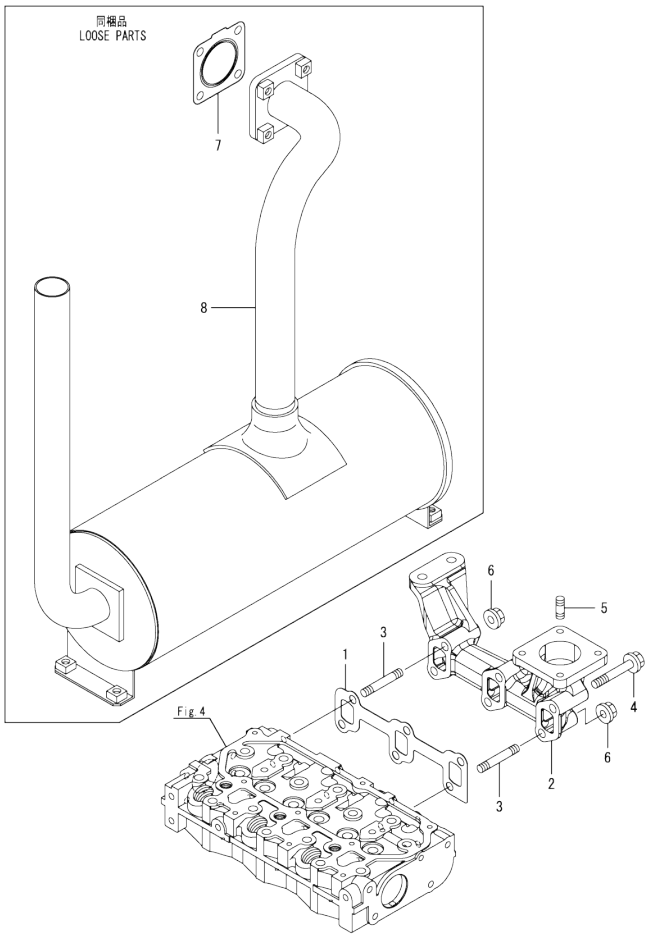

No.	Lev.	Parts No.	Description	Q'ty (A)	(B)	(C)	(D)	(E)	(F)	I	R
1	1	119125-13110	GASKET	1							
2	1	119125-13140	MANIFOLD, EXHAUST	1							
3	1	119717-13600	STUD, M8X50	2							
4	1	119802-13620	BOLT, M8X50	4							
5	1	119131-18320	STUD, M8X22	4							
6	1	26306-080002	NUT, M8	2							
7	1	119515-13200	GASKET, SILENCER	3							
8	1	119128-13510	SILENCER	1							

N:Old $\frac{\text{Yes}}{\text{No}}$ New. Q:Old $\frac{\text{No}}{\text{Yes}}$ New. R:Old $\frac{\text{Yes}}{\text{Yes}}$ New. S:Old $\frac{\text{No}}{\text{No}}$ New. W:Add. Z:Discontinued. F:Interchangeable by set. K:Q'ty Change

Copyright (C) YANMAR CO., LTD. All RightsReserved.

Fig.7. CAMSHAFT & DRIVING GEAR

(A)=3TNM68-ASGS
(B)=
(C)=
(D)=
(E)=
(F)=

No.	Lev.	Parts No.	Description	Q'ty (A)	(B)	(C)	(D)	(E)	(F)	I	R
1	1	119260-14200	TAPPET	6							
2	1	119260-14400	ROD, PUSH	6							
3	1	119125-14580	CAMSHAFT ASSY	1							
8	1	26106-060122	BOLT, M6X 12 PLATED	2							
9	1	119125-25100	GEAR ASSY, IDLE	1							
12	1	129150-25301	BOLT	4							
13	1	119125-25930	GEAR, PUMP	1							
14	1	119125-25910	BUSH, IDLE GEAR	1							1

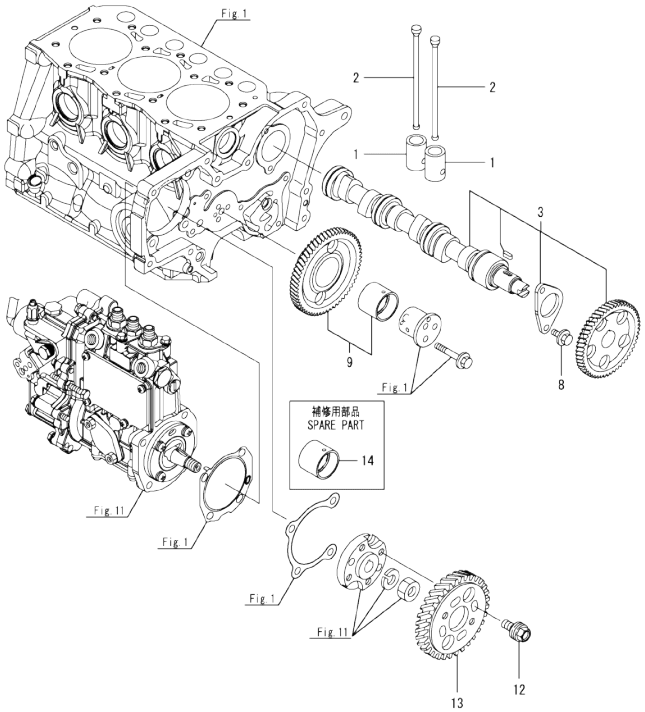

Remarks
(1)Spare parts.

N:Old ←Yes/No→ New. Q:Old ←No/Yes→ New. R:Old ←Yes/Yes→ New. S:Old ←No/No→ New. W:Add. Z:Discontinued. F:Interchangeable by set. K:Q'ty Change

Copyright (C) YANMAR CO., LTD. All RightsReserved.

Fig.8. CRANKSHAFT & PISTON

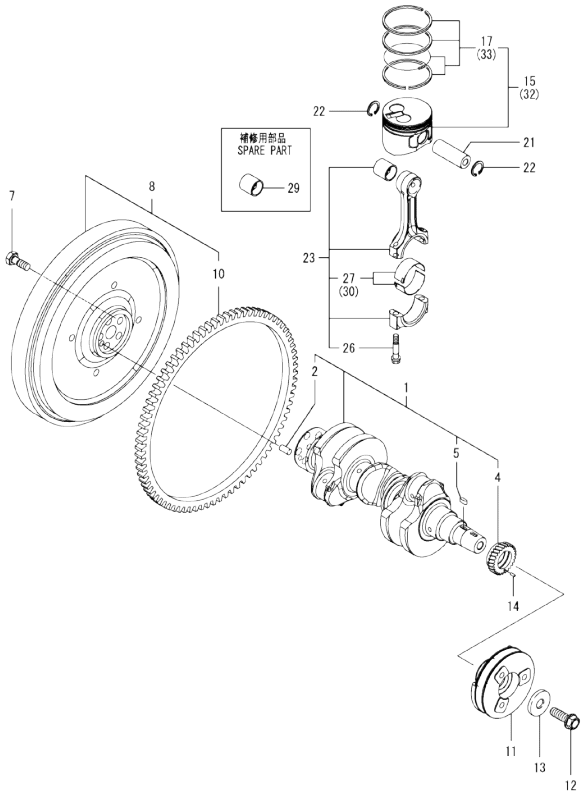

(A)=3TNM68-ASGS
(B)=
(C)=
(D)=
(E)=
(F)=

No.	Lev.	Parts No.	Description	Q'ty (A)	(B)	(C)	(D)	(E)	(F)	I	R
1	1	119125-21700	CRANKSHAFT ASSY	1							
2	2	129100-01580	PIN, M8X16	1							
4	2	119125-21200	GEAR, CRANKSHAFT	1							
5	2	22512-040120	KEY, 4X 12	1							
7	1	121111-21501	BOLT, FLYWHEEL	5							
8	1	119128-21560	FLYWHEEL ASSY	1							
10	2	119865-21600	GEAR, RING	1							
11	1	119125-21650	V-PULLEY	1							
12	1	119621-21681	BOLT, FLANGE 12X1.25	1							
13	1	119620-21941	WASHER	1							
14	1	22351-030010	PIN, SPRING 3.0X10	1							
15	1	119125-22080	PISTON ASSY	3							
17	2	119125-22500	RING SET, PISTON	3							
21	1	119125-22300	PIN, PISTON	3							
22	1	22252-000200	RING, 20	6							
23	1	119125-23000	ROD ASSY, CONNECTING	3							
26	2	119717-23200	BOLT, CONNECTING ROD	6							
27	2	119515-23601	BEARING, CRANK PIN	3							
29	1	119260-23910	BEARING, PISTON PIN	3							1
30	1	119515-23611	METAL ASSY, 0.25	3							2
32	1	119125-22900	PISTON ASSY, 0.25 OS	3							3
33	2	119125-22550	RING SET, 0.25 OS	3							3

Remarks
(1)Spare parts.
(2)Under-sized(U.S.=0.25)part.
(3)Over-sized(O.S.=0.25)part.

N:Old ◄Yes/No► New. Q:Old ◄No/Yes► New, R:Old ◄Yes/Yes► New, S:Old ◄No/No► New, W:Add, Z:Discontinued, F:Interchangeable by set, K:Q'ty Change

Copyright (C) YANMAR CO., LTD. All RightsReserved.

Fig.9. LUB. OIL SYSTEM

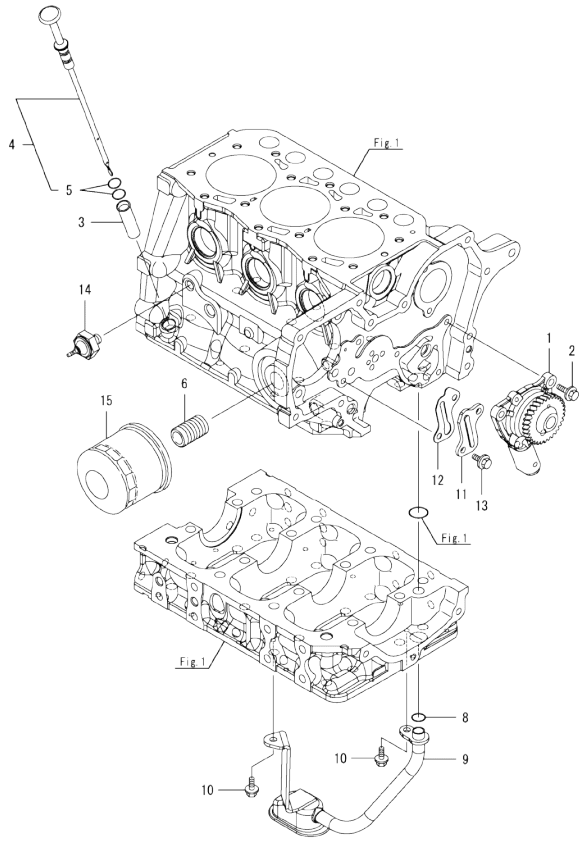

(A)=3TNM68-ASGS
(B)=
(C)=
(D)=
(E)=
(F)=

No.	Lev.	Parts No.	Description	Q'ty (A)	(B)	(C)	(D)	(E)	(F)	I	R
1	1	119125-32000	PUMP ASSY, OIL	1							
2	1	26106-060142	BOLT, M6X 14 PLATED	3							
3	1	119125-34810	GUIDE, DIPSTICK	1							
4	1	119125-34820	DIPSTICK, OIL	1							
5	2	119125-34900	O-RING	2							
6	1	119717-35140	BOLT	1							
8	1	119209-35030	O-RING, P11	1							
9	1	119128-35080	PIPE ASSY, OIL INLET	1							
10	1	26106-060102	BOLT, M6X 10 PLATED	2							
11	1	119125-39200	COVER	1							
12	1	119125-39220	GASKET	1							
13	1	26106-060102	BOLT, M6X 10 PLATED	2							
14	1	114250-39450	SWITCH, 0.5KG	1							
15	1	119305-35151	FILTER ASSY, D68XL65	1							1

Remarks
(1)Spare parts.

N:Old ←Yes/No→ New. Q:Old ←No/Yes→ New. R:Old ←Yes/Yes→ New. S:Old ←No/No→ New. W:Add. Z:Discontinued. F:Interchangeable by set. K:Q'ty Change

Copyright (C) YANMAR CO., LTD. All RightsReserved.

Fig.10. COOLING WATER SYSTEM

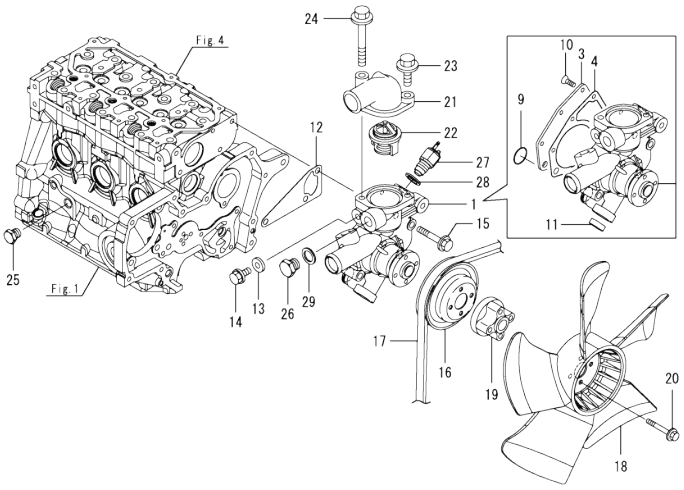

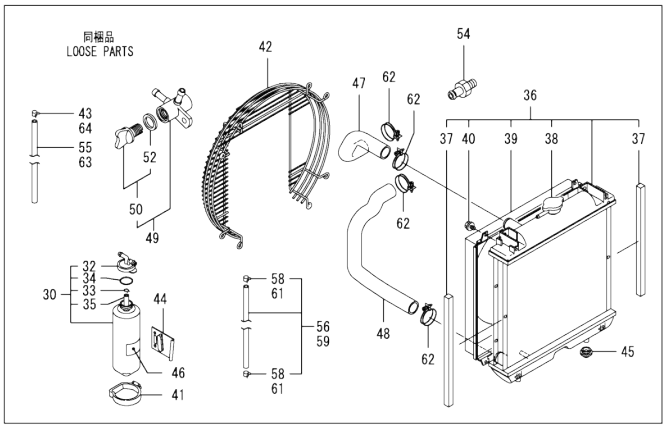

(A)=3TNM68-ASGS (D)=
(B)= (E)=
(C)= (F)=

No.	Lev.	Parts No.	Description	Q'ty (A)	(B)	(C)	(D)	(E)	(F)	I	R
1	1	119125-42000	PUMP ASSY, WATER	1							
3	2	119125-42020	COVER	1							
4	2	119125-42030	GASKET, WATER PUMP	1							
9	2	119209-42320	O-RING, P21 EPDM	1							
10	2	26577-060122	SCREW, M6X12	4							
11	2	27241-220000	PLUG, 22	1							
12	1	119260-42021	GASKET, WATER PUMP	1							
13	1	23414-080000	GASKET, 8X1.0	1							
14	1	26106-080122	BOLT, M8X 12 PLATED	1							
15	1	26106-080452	BOLT, M8X 45 PLATED	3							
16	1	119717-42350	V-PULLEY, D=100	1							
17	1	25132-003500	V-BELT, A35	1							
18	1	119265-44740	FAN, D=310X5F	1							
19	1	129457-44760	SPACER, FAN	1							
20	1	26106-060452	BOLT, M6X 45 PLATED	4							
21	1	124101-49531	COVER, THERMOSTAT	1							
22	1	119717-49800	THERMOSTAT, 71	1							
23	1	26106-080252	BOLT, M8X 25 PLATED	1							
24	1	26106-080652	BOLT, M8X 65 PLATED	1							
25	1	171056-49120	PLUG, DRAIN	1							
26	1	121450-42450	PLUG, M16	1							
27	1	121250-44901	SWITCH, 110	1							
28	1	124465-44950	GASKET, 16	1							
29	1	124465-44950	GASKET, 16	1							
30	1	171064-44510	TANK ASSY, SUB	1							
32	2	121450-44531	CAP	1							
33	2	124450-44560	RETAINER	1							
34	2	121470-44581	GASKET	1							
35	2	23065-070225	HOSE 7X 225	1							
36	1	119128-44520	RADIATOR ASSY	1							
37	2	119128-44570	GASKET	2							
38	2	129107-44590	CAP, RADIATOR	1							
39	2	119515-44600	SHROUD	1							
40	2	26014-060122	BOLT, M6X 12	4							
41	1	124450-44550	BAND	1							
42	1	119802-44560	GUARD	1							
43	1	121250-44590	CLAMP	2							
44	1	121256-44600	BRACKET, SUB TANK	1							
45	1	119255-44660	ABSORBER	2							
46	1	124764-44810	LABEL, SUB TANK	1							
47	1	119128-49030	PIPE, WATER	1							
48	1	119128-49040	PIPE, WATER	1							
49	1	129150-49100	COCK ASSY, 3-WAY	1							
50	2	129150-49080	COCK, DRAIN	1							
52	3	119629-49080	GASKET	1							
54	1	121550-49111	JOINT, PT1/4	1							
55	1	124766-49160	PIPE, WATER DRAIN	1							
56	1	129210-49240	PIPE ASSY, DRAIN	1							
58	2	124766-59050	CLIP, HOSE 12	2							
59	1	129210-49280	PIPE ASSY, DRAIN	1							
61	2	124766-59050	CLIP, HOSE 12	2							

N:Old ←Yes/No→ New. Q:Old ←No/Yes→ New. R:Old ←Yes/Yes→ New. S:Old ←No/No→ New. W:Add. Z:Discontinued. F:Interchangeable by set. K:Q'ty Change

++ CONTINUE ++

Copyright (C) YANMAR CO., LTD. All RightsReserved.

Fig.10. COOLING WATER SYSTEM

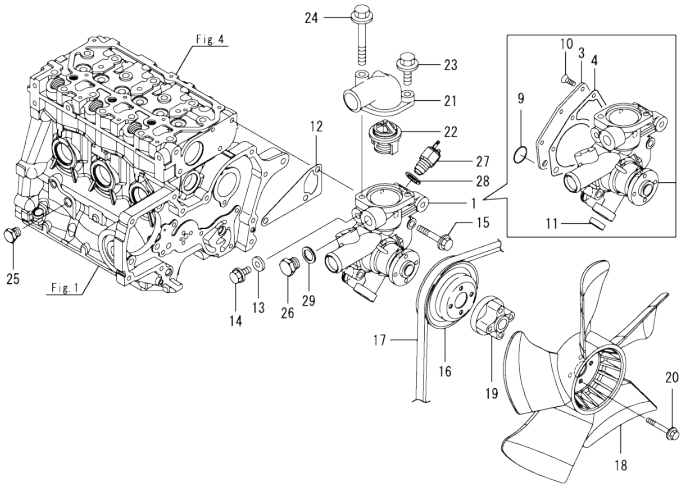

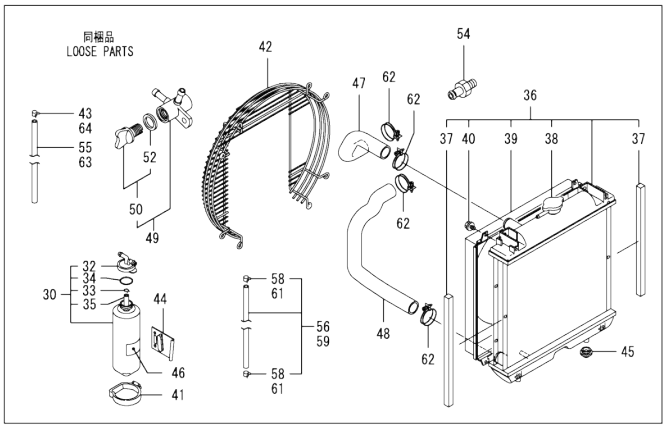

(A)=3TNM68-ASGS (D)=
(B)= (E)=
(C)= (F)=

No.	Lev.	Parts No.	Description	Q'ty (A)	(B)	(C)	(D)	(E)	(F)	I	R
62	1	23010-038000	CLAMP, 38	4							
63	1	23061-061000	PIPE, 6X1000	1							
64	1	23080-007000	CLAMP, 7	1							

N:Old ←Yes/No→ New. Q:Old ←No/Yes→ New. R:Old ←Yes/Yes→ New. S:Old ←No/No→ New. W:Add. Z:Discontinued. F:Interchangeable by set. K:Q'ty Change

Copyright (C) YANMAR CO., LTD. All RightsReserved.

Fig.11. FUEL INJECTION PUMP

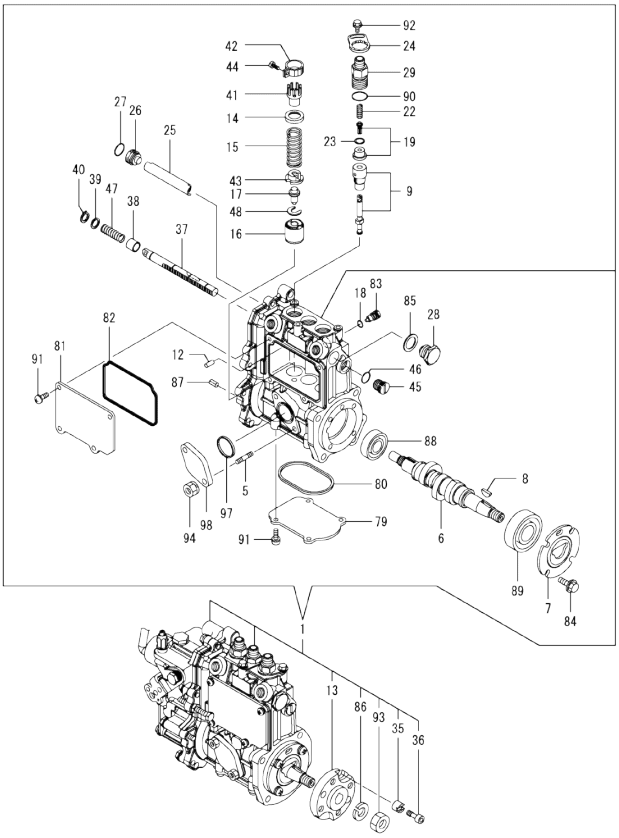

Remarks
(1)Governor(Fig.12)is incorporated in this Fuel Injection Pump (Ref.1).

(A)=3TNM68-ASGS (D)=
(B)= (E)=
(C)= (F)=

No.	Lev.	Parts No.	Description	Q'ty (A)	(B)	(C)	(D)	(E)	(F)	I	R
1	1	719128-51320	PUMP ASSY, INJECTION	1							1
5	2	129155-51020	STUD	2							
6	2	119125-51030	CAMSHAFT	1							
7	2	119125-51060	RETAINER, BEARING	1							
8	2	122710-51090	KEY	1							
9	2	119125-51100	PLUNGER ASSY	3							
12	2	129155-51140	PIN	3							
13	2	119717-51150	FLANGE	1							
14	2	158600-51170	RETAINER, SPRING	3							
15	2	119717-51190	SPRING, PLUNGER	3							
16	2	119125-51241	TAPPET	3							
17	2	119125-51250	GUIDE, TAPPET	3							
18	2	129155-51280	O-RING, S6	1							
19	2	119125-51300	VALVE ASSY, DELIVERY	3							
22	2	128990-51330	SPRING, DELIVERY	3							
23	2	124550-51350	GASKET, DELIVERY	3							
24	2	119125-51370	RETAINER	3							
25	2	129155-51400	DEFLECTOR	1							
26	2	158600-51410	PLUG, DEFLECTOR	1							
27	2	119717-51420	O-RING	1							
28	2	158600-51420	PLUG, DEFLECTOR	1							
29	2	158600-51442	VALVE ASSY, DELIVERY	3							
35	2	119125-51481	COLLAR,FIC FIX	1							
36	2	119125-51491	BOLT, FIXATION	1							
37	2	119717-51500	RACK, CONTROL	1							
38	2	119025-51520	BUSH,RACK	1							
39	2	129155-51530	SPACER	1							
40	2	129155-51540	CIRCLIP	1							
41	2	129155-51550	PINION, CONTROL	3							
42	2	129100-51560	PINION	3							
43	2	119717-51570	RETAINER, SPRING	3							
44	2	129100-51570	SCREW	3							
45	2	158600-51570	PLUG	1							
46	2	129155-51580	O-RING	1							
47	2	129155-51591	SPRING, RACK	1							
48	2	129155-51600	SHIM SET, ADJUSTING	3							
79	2	119125-51700	COVER	1							
80	2	119717-51711	GASKET	1							
81	2	119717-51750	COVER	1							
82	2	119717-51761	GASKET	1							
83	2	158600-51790	STOOPER, RACK	1							
84	2	119125-51900	BOLT, 6 X 14	4							
85	2	22190-160002	WASHER, SEAL 16	1							
86	2	22217-120000	WASHER, SPRING 12	1							
87	2	22351-050010	PIN, SPRING 5.0X10	2							
88	2	24101-060034	BEARING, BALL 6003	1							
89	2	24101-063034	BEARING, BALL 6303	1							
90	2	24316-000150	O-RING, 4DP15.0	3							
91	2	26022-050122	SCREW, M5X12	8							
92	2	26106-050102	BOLT, M5X 10 PLATED	3							
93	2	26716-120002	NUT, M12	1							

N:Old ←Yes/No→ New. Q:Old ←No/Yes→ New. R:Old ←Yes/Yes→ New. S:Old ←No/No→ New. W:Add. Z:Discontinued. F:Interchangeable by set. K:Q'ty Change

++ CONTINUE ++

Copyright (C) YANMAR CO., LTD. All RightsReserved.

Fig.11. FUEL INJECTION PUMP

(A)=3TNM68-ASGS
(B)=
(C)=
(D)=
(E)=
(F)=

No.	Lev.	Parts No.	Description	Q'ty (A)	(B)	(C)	(D)	(E)	(F)	I	R
94	2	119717-51860	NUT, M6	2							
97	2	129155-52051	GASKET	1							
98	2	129100-52200	COVER	1							

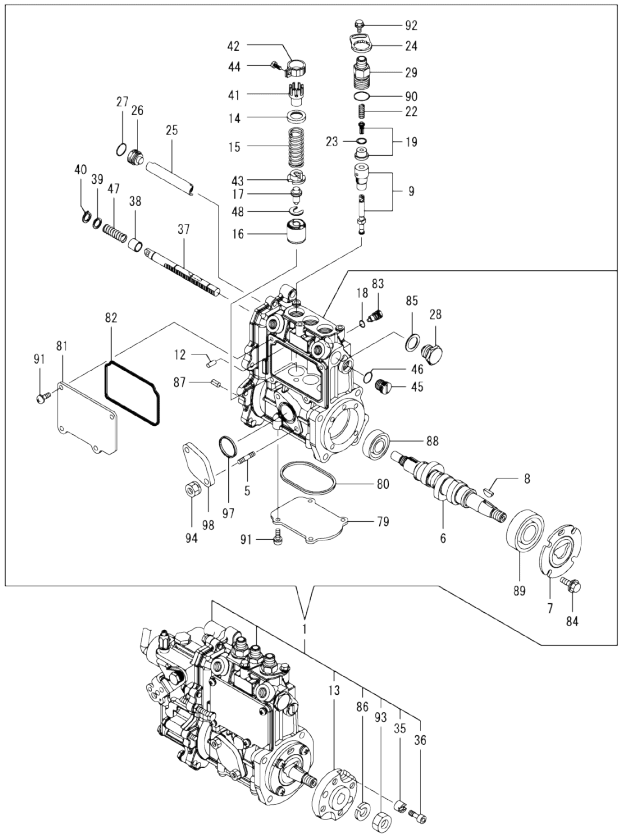

Remarks
(1)Governor(Fig.12)is incorporated in
this Fuel Injection Pump (Ref.1).

N:Old ←Yes/No→ New. Q:Old ←No/Yes→ New. R:Old ←Yes/Yes→ New. S:Old ←No/No→ New. W:Add. Z:Discontinued. F:Interchangeable by set. K:Q'ty Change

Copyright (C) YANMAR CO., LTD. All RightsReserved.

Fig.12. GOVERNOR

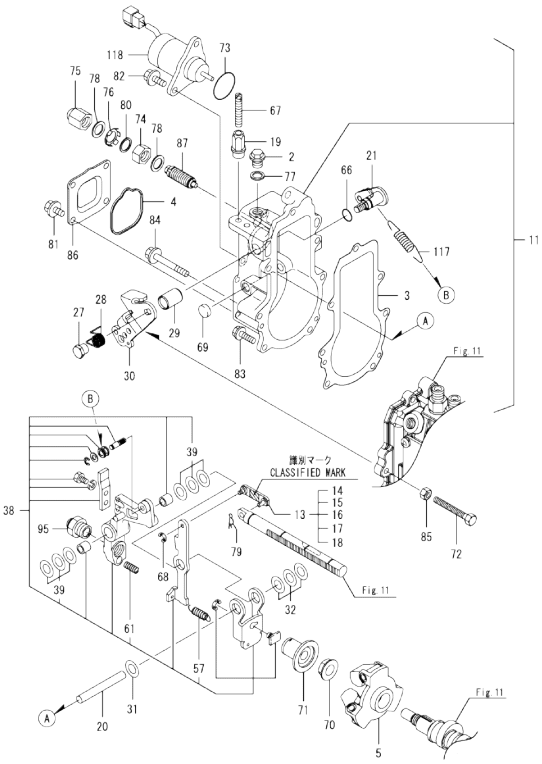

Remarks
*This figure(Governor)is incorporated
in the Fuel Injection Pump (Fig.11).
(1)Selective parts, mark; 93
(2)Selective parts, mark; 98
(3)Selective parts, mark; 88
(4)Selective parts, mark; 00
(5)Selective parts, mark; 03

(A)=3TNM68-ASGS
(B)=
(C)=
(D)=
(E)=
(F)=

No.	Lev.	Parts No.	Description	Q'ty (A)	(B)	(C)	(D)	(E)	(F)	I	R
2	2	119717-51930	PLUG,M10	1							
3	2	119717-61050	GASKET	1							
4	2	119717-61070	GASKET	1							
5	2	119125-61201	WEIGHT ASSY,GOVERNOR	1							
11	2	119128-61300	CASE ASSY, GOVERNOR	1							
13	3	119125-61110	LINK ASSY	1							
14	4	119125-61120	LINK, MARK 93	1							1
15	4	119125-61130	LINK, MARK 98	1							2
16	4	119125-61140	LINK, MARK 88	1							3
17	4	119125-61150	LINK, MARK 00	1							4
18	4	119125-61160	LINK, MARK 03	1							5
19	3	129209-61370	NUT, M6	1							
20	3	119125-61390	SHAFT	1							
21	3	119125-61401	SHAFT ASSY	1							
27	3	129255-61410	NUT, LOCK	1							
28	3	119527-61420	SPRING	1							
29	3	119125-61430	BUSH	1							
30	3	119515-61440	LEVER, CONTROL	1							
31	3	129156-61460	SHIM, T=0.6	1							
32	3	129155-61480	SPACER ASSY	1							
38	3	119125-61501	LEVER ASSY, GOVERNOR	1							
39	4	174307-51700	SHIM SET	2							
57	4	129486-61540	SPRING, SET	1							
61	4	129100-61650	SPRING, CONTROLLER	1							
66	3	129155-61830	O-RING, S10	1							
67	3	121575-66830	SCREW	1							
68	3	22272-000030	RING, E- 3	1							
69	3	27260-120000	PLUG, 12	1							
70	2	129008-61301	NUT	1							
71	2	129155-61341	SLEEVE	1							
72	2	129155-61460	BOLT, IDLE	1							
73	2	158552-61900	O-RING	1							
74	2	129209-61920	NUT, ARB	1							
75	2	129209-61930	NUT, CAP	1							
76	2	129209-61970	PLATE	1							
77	2	22190-100002	WASHER, SEAL 10	1							
78	2	22190-120002	WASHER, SEAL 12	2							
79	2	22372-040000	PIN, SNAP 4	1							
80	2	23414-120016	GASKET, 12X1.0	1							
81	2	26106-060102	BOLT, M6X 10 PLATED	4							
82	2	26106-060142	BOLT, M6X 14 PLATED	2							
83	2	26106-060202	BOLT, M6X 20 PLATED	4							
84	2	26106-060452	BOLT, M6X 45 PLATED	3							
85	2	26756-060002	NUT, LOCK M6	1							
86	2	119717-61060	COVER, GOVERNOR CASE	1							
87	2	119125-61450	LIMITER ASSY, FUEL	1							
95	2	119515-61560	ANGLEICH ASSY	1							
117	2	119527-61700	SPRING, GOVERNOR	1							
118	2	119653-77950	SOLENOID, STOP	1							

N:Old ←Yes/No→ New. Q:Old ←No/Yes→ New. R:Old ←Yes/Yes→ New. S:Old ←No/No→ New. W:Add. Z:Discontinued. F:Interchangeable by set. K:Q'ty Change

Copyright (C) YANMAR CO., LTD. All RightsReserved.

Fig.13. FUEL INJECTION VALVE

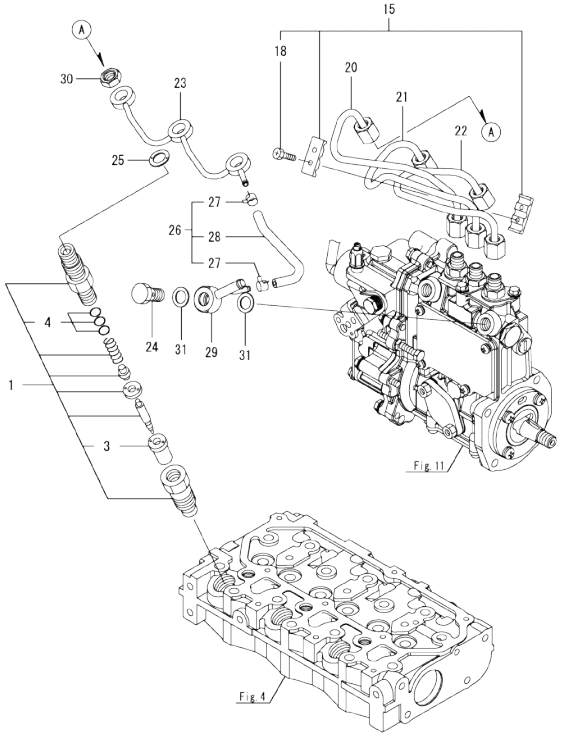

(A)=3TNM68-ASGS
(B)=
(C)=
(D)=
(E)=
(F)=

No.	Lev.	Parts No.	Description	Q'ty (A)	(B)	(C)	(D)	(E)	(F)	I	R
1	1	119515-53001	VALVE ASSY,INJECTION	3							
3	2	119515-53010	VALVE ASSY,INJECTION	3							
4	2	129901-53800	SHIM SET, ADJUSTING	3							1
15	1	129150-59120	RETAINER, PIPE	1							
18	2	129150-59131	BOLT, M4X14	2							
20	1	119125-59810	PIPE, FUEL INJECTION	1							
21	1	119125-59820	PIPE, FUEL INJECTION	1							
22	1	119125-59830	PIPE, FUEL INJECTION	1							
23	1	119125-59540	PIPE ASSY, RETURN	1							
24	1	119125-59560	BOLT, PIPE JOINT	1							
25	1	129901-59560	GASKET	3							
26	1	119125-59570	PIPE ASSY, RETURN	1							
27	2	124066-59100	CLIP, HOSE 8	2							
28	2	119000-59550	PIPE, FUEL RETURN	1							
29	1	119840-59570	JOINT	1							
30	1	119620-59700	NUT, NOZZLE	3							
31	1	22190-120002	WASHER, SEAL 12	2							

Remarks
(1)Spare parts.

N:Old ◄Yes/No► New. Q:Old ◄No/Yes► New. R:Old ◄Yes/Yes► New. S:Old ◄No/No► New. W:Add. Z:Discontinued. F:Interchangeable by set. K:Q'ty Change

Copyright (C) YANMAR CO., LTD. All RightsReserved.

Fig.14. FUEL FILTER

(A)=3TNM68-ASGS
(B)=
(C)=
(D)=
(E)=
(F)=

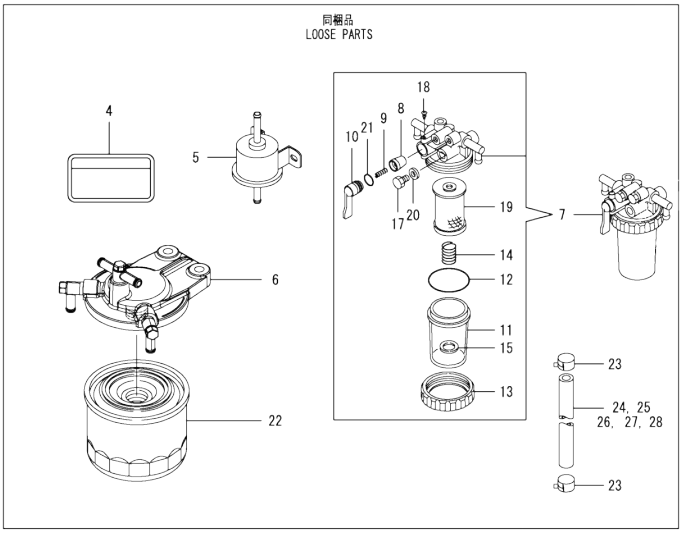

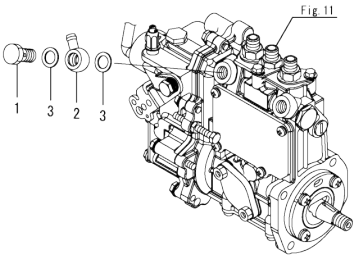

No.	Lev.	Parts No.	Description	Q'ty (A)	(B)	(C)	(D)	(E)	(F)	I	R
1	1	103854-39140	BOLT, PIPE JOINT	1							
2	1	101304-59020	JOINT, PIPE 12	1							
3	1	22190-120002	WASHER, SEAL 12	2							
4	1	114110-07761	LABEL, FUEL OIL CAUT	1							
5	1	119225-52102	PUMP ASSY, FUEL FEED	1							
6	1	119934-55611	BRACKET, FILTER	1							
7	1	129335-55701	SEPARATOR ASSY,WATER	1							
8	2	104200-55321	VALVE, TAPER	1							
9	2	104200-55330	SPRING, VALVE	1							
10	2	104200-55341	HANDLE	1							
11	2	124064-55510	COVER	1							
12	2	102103-55520	O-RING	1							
13	2	110250-55610	RING, RETAINING	1							
14	2	121257-55720	SPRING	1							
15	2	121257-55731	FLOAT	1							
17	2	101720-55750	PLUG, 6	2							
18	2	104200-55750	SCREW, M4	1							
19	2	171081-55910	SCREEN	1							
20	2	23418-060000	GASKET, 6X1.0	2							
21	2	24311-240100	O-RING, 1AP10A	1							
22	1	119802-55801	FILTER, FUEL	1							
23	1	124766-59050	CLIP, HOSE 12	12							
24	1	124574-59090	PIPE, FUEL D7.5X900	1							
25	1	105230-59510	PIPE, FUEL	2							
26	1	170121-59510	PIPE, FUEL	1							
27	1	129612-59520	PIPE, FUEL	1							
28	1	105025-59760	PIPE, FUEL	1							

N:Old ←Yes/No→ New. Q:Old ←No/Yes→ New. R:Old ←Yes/Yes→ New. S:Old ←No/No→ New. W:Add. Z:Discontinued. F:Interchangeable by set. K:Q'ty Change

Copyright (C) YANMAR CO., LTD. All RightsReserved.

Fig.15. STARTING MOTOR

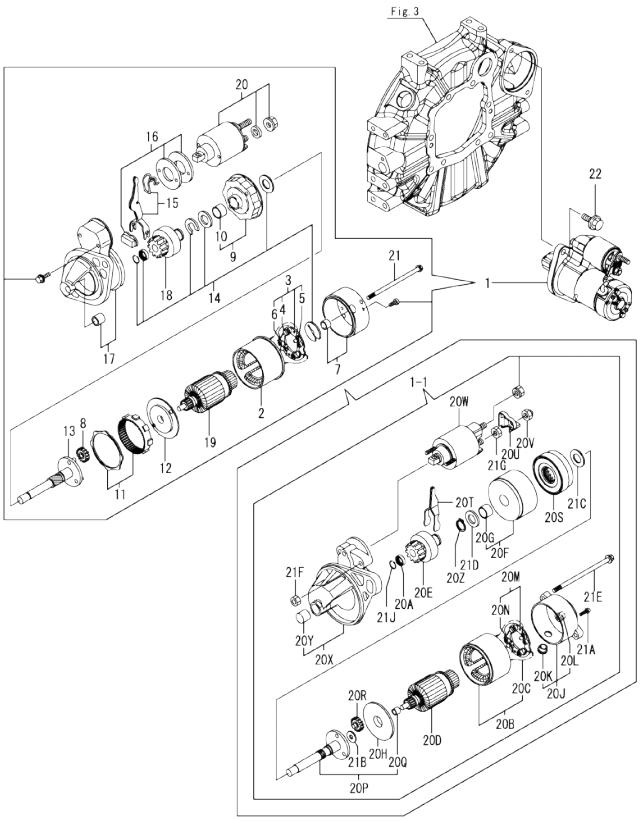

Remarks
(1)Interchangeable by simultaneous replacement with Fig.3 No.2-1.

(A)=3TNM68-ASGS (D)=
(B)= (E)=
(C)= (F)=

No.	Lev.	Parts No.	Description	Q'ty (A)	(B)	(C)	(D)	(E)	(F)	I	R
1	1	119125-77010	STARTER ASSY, 1.2KW	1							
1-1	1	119515-77010	STARTER, P1.0	1						F	1
	(A=E024780)										
2	2	129698-77110	YOKE ASSY	1						Z	
	(A=E024780)										
3	2	129698-77120	HOLDER ASSY, BRUSH	1						Z	
	(A=E024780)										
4	3	129698-77130	BRUSH	2						Z	
	(A=E024780)										
5	3	129698-77140	BRUSH SET	1						Z	
	(A=E024780)										
6	3	129698-77150	SPRING, BRUSH	4						Z	
	(A=E024780)										
7	2	129698-77161	COVER ASSY, STARTER	1						Z	
	(A=E024780)										
8	2	119125-77170	GEAR, PLANETARY	3						Z	
	(A=E024780)										
9	2	129698-77180	BRACKET, CENTER P	1						Z	
	(A=E024780)										
10	3	129698-77190	BRACKET, CENTER	1						Z	
	(A=E024780)										
11	2	119125-77200	GEAR, INTERNAL	1						Z	
	(A=E024780)										
12	2	119125-77210	BRACKET, CENTER A	1						Z	
	(A=E024780)										
13	2	119125-77230	SHAFT, PINION	1						Z	
	(A=E024780)										
14	2	129698-77250	WASHER SET	1						Z	
	(A=E024780)										
15	2	119125-77270	LEVER SET, SHIFT	1						Z	
	(A=E024780)										
16	2	119125-77280	COVER KIT, DUST	1						Z	
	(A=E024780)										
17	2	119125-77520	CASE ASSY, GEAR	1						Z	
	(A=E024780)										
18	2	119125-77660	PINION ASSY	1						Z	
	(A=E024780)										
19	2	119125-77710	ARMATURE ASSY	1						Z	
	(A=E024780)										
20	2	119125-77760	SWITCH ASSY, MAGNET	1						Z	
	(A=E024780)										
20A	2	X0280210331	NUT	1						W	
	(A=E024780)										
20B	2	X0281007680	YOKE ASSY	1						W	
	(A=E024780)										
20C	3	X0280996180	STARTER KIT	2						W	
	(A=E024780)										
20D	2	X0282005871	ARMATURE ASSY	1						W	
	(A=E024780)										
20E	2	X0283006960	CLUTCH	1						W	
	(A=E024780)										

N:Old ←Yes/No→ New. Q:Old ←No/Yes→ New. R:Old ←Yes/Yes→ New. S:Old ←No/No→ New. W:Add. Z:Discontinued. F:Interchangeable by set. K:Q'ty Change

++ CONTINUE ++

Copyright (C) YANMAR CO., LTD. All RightsReserved.

Fig.15. STARTING MOTOR

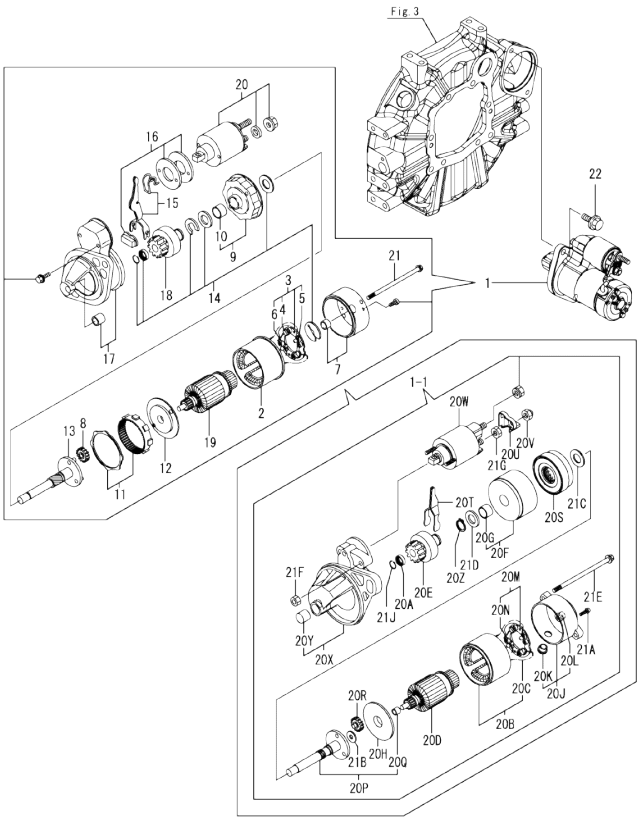

Remarks
(1)Interchangeable by simultaneous replacement with Fig.3 No.2-1.

(A)=3TNM68-ASGS (D)=
(B)= (E)=
(C)= (F)=

No.	Lev.	Parts No.	Description	Q'ty (A)	(B)	(C)	(D)	(E)	(F)	I	R
20F	2	X0284105040	BEARING ASSY, SUB	1						W	
	(A=E024780)										
20G	3	X9491034330	BEARING	1						W	
	(A=E024780)										
20H	2	X0284525010	PLATE	1						W	
	(A=E024780)										
20J	2	X0285007030	FRAME ASSY	1						W	
	(A=E024780)										
20K	3	X0280626010	COVER	1						W	
	(A=E024780)										
20L	3	X9491040990	BEARING	1						W	
	(A=E024780)										
20M	2	X0285105190	HOLDER ASSY	1						W	
	(A=E024780)										
20N	3	X0285205030	SPRING	4						W	
	(A=E024780)										
20P	2	X0286105010	SHAFT ASSY, SUB	1						W	
	(A=E024780)										
20Q	3	X9491034320	BEARING	1						W	
	(A=E024780)										
20R	2	X0286305010	GEAR	3						W	
	(A=E024780)										
20S	2	X0286355010	GEAR	1						W	
	(A=E024780)										
20T	2	X0287405140	LEVER	1						W	
	(A=E024780)										
20U	2	X1280330020	COVER, TERMINAL	1						W	
	(A=E024780)										
20V	2	X1289510130	NUT	1						W	
	(A=E024780)										
20W	2	X2534000090	SWITCH ASSY	1						W	
	(A=E024780)										
20X	2	X4284001590	HOUSING ASSY	1						W	
	(A=E024780)										
20Y	3	X9491050100	BEARING, NEEDLE	1						W	
	(A=E024780)										
20Z	2	X9055715000	RING	1						W	
	(A=E024780)										
21	2	124195-77770	BOLT, THROUGH	2						Z	
	(A=E024780)										
21A	2	X9490065670	SCREW, M4X6	2						W	
	(A=E024780)										
21B	2	X9490138090	WASHER	1						W	
	(A=E024780)										
21C	2	X9490138100	WASHER	1						W	
	(A=E024780)										
21D	2	X9490138110	WASHER	1						W	
	(A=E024780)										
21E	2	X9490423520	BOLT, THROUGH	2						W	
	(A=E024780)										
21F	2	X9490560750	NUT	2						W	

N:Old ←Yes/No→ New. Q:Old ←No/Yes→ New. R:Old ←Yes/Yes→ New. S:Old ←No/No→ New. W:Add. Z:Discontinued. F:Interchangeable by set. K:Q'ty Change

++ CONTINUE ++

Copyright (C) YANMAR CO., LTD. All RightsReserved.

Fig.15. STARTING MOTOR

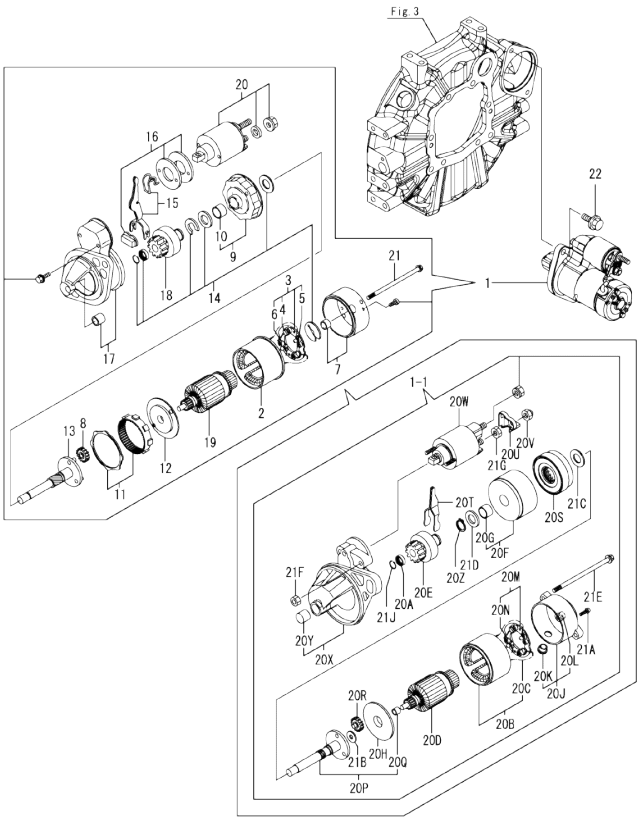

Remarks
(1)Interchangeable by simultaneous replacement with Fig.3 No.2-1.

(A)=3TNM68-ASGS (D)=
(B)= (E)=
(C)= (F)=

No.	Lev.	Parts No.	Description	Q'ty (A)	(B)	(C)	(D)	(E)	(F)	I	R
21G	(A=E024780) 2 (A=E024780)	X9490562360	NUT	1						W	
21J	2 (A=E024780)	X9490721360	RING	1						W	
22	1	26106-100252	BOLT, M10X 25 PLATED	2							

N:Old ◄Yes/No► New. Q:Old ◄No/Yes► New. R:Old ◄Yes/Yes► New. S:Old ◄No/No► New. W:Add. Z:Discontinued. F:Interchangeable by set. K:Q'ty Change

Copyright (C) YANMAR CO., LTD. All RightsReserved.

Fig.16. GENERATOR

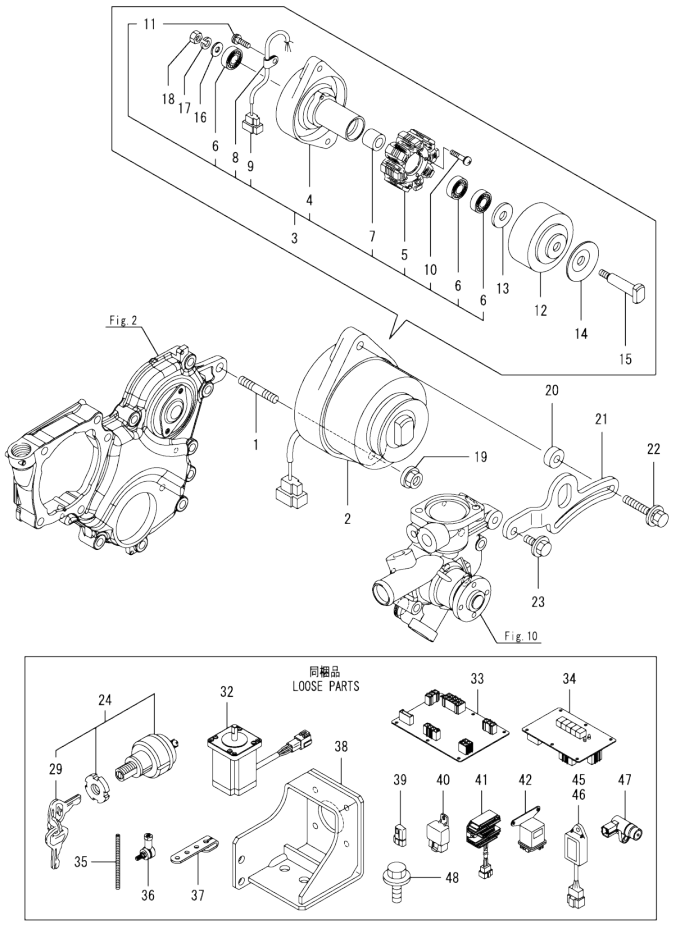

(A)=3TNM68-ASGS (D)=
(B)= (E)=
(C)= (F)=

No.	Lev.	Parts No.	Description	Q'ty (A)	(B)	(C)	(D)	(E)	(F)	I	R
1	1	129795-01900	STUD	1							
2	1	171301-77201	DYNAMO ASSY, 15A	1							
3	2	XM08137	PLATE ASSY	1							
4	3	X2A07073KA	PLATE	1							
5	3	X4A07023KB	STATOR ASSY	1							
6	3	24104-062010	BEARING, 6201UUC3	3							
7	3	XM329830000	COLLAR	1							
8	3	XM069000000	CLAMP	1							
9	3	X417878	COUPLER	1							
10	3	XYSPS402400	SCREW	2							
11	3	XYSPS400800	SCREW	1							
12	2	X3A08877KA	FLYWHEEL	1							
13	2	XM67935	WASHER	1							
14	2	XM721740000	PULLEY	1							
15	2	X4A07403K01	SHAFT	1							
16	2	XM860250000	WASHER	1							
17	2	XM219230000	WASHER	1							
18	2	XM863720000	NUT	1							
19	1	26306-100002	NUT, M10	1							
20	1	119940-77270	SPACER, GENERATOR	1							
21	1	119540-77310	ADJUSTER	1							
22	1	129972-77341	BOLT, ADJUSTER L=50	1							
23	1	26106-080202	BOLT, M8X 20 PLATED	1							
24	1	194215-52110	SWITCH, STARTING	1							
29	2	194155-52160	KEY ASSY	1							
32	1	183012-66020	MOTOR	1							
33	1	183012-66030	DRIVE, MOTOR	1							
34	1	183012-66040	PANEL	1							
35	1	119128-66710	ROD	1							
36	1	119446-66740	JOINT	2							
37	1	119446-66800	LEVER	1							
38	1	119128-66820	BRACKET	1							
39	1	119643-66900	DIODE	1							
40	1	119247-77100	RELAY, SAFETY	5							
41	1	119225-77721	LIMITER, CURRENT 20A	1							
42	1	119650-77911	RELAY ASSY, GLOW	1							
45	1	129155-77925	TIMER	1							
46	1	129211-77920	TIMER	1							
47	1	124593-78500	PULSAR	1							
48	1	26106-100182	BOLT, M10X 18 PLATED	2							

N:Old ←Yes/No→ New. Q:Old ←No/Yes→ New. R:Old ←Yes/Yes→ New. S:Old ←No/No→ New. W:Add. Z:Discontinued. F:Interchangeable by set. K:Q'ty Change

Copyright (C) YANMAR CO., LTD. All RightsReserved.

Fig.17. GASKET SET

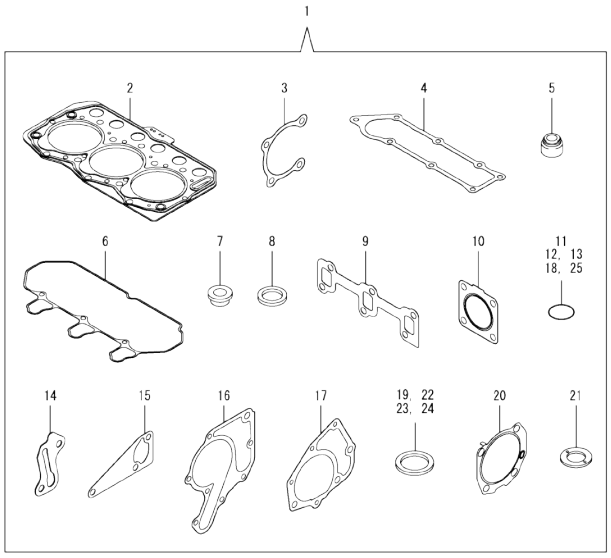

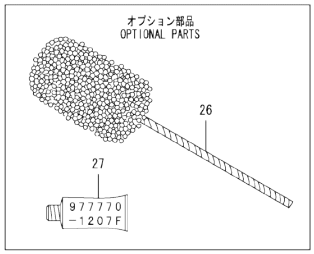

(A)=3TNM68-ASGS
(B)=
(C)=
(D)=
(E)=
(F)=

No.	Lev.	Parts No.	Description	Q'ty (A)	(B)	(C)	(D)	(E)	(F)	I	R
1	1	119125-92600	GASKET SET	1							1
2	2	119125-01330	GASKET, HEAD	1							
3	2	119125-01790	GASKET	1							
4	2	119125-11330	GASKET	1							
5	2	119125-11340	SEAL, VALVE STEM	6							
6	2	119125-11370	GASKET, BONNET	1							
7	2	129901-11450	PROTECTOR, NOZZLE	3							
8	2	119600-11460	GASKET, NOZZLE	6							
9	2	119125-13110	GASKET	1							
10	2	119515-13200	GASKET, SILENCER	1							
11	2	129900-32040	O-RING, P14	1							
12	2	119125-34900	O-RING	1							
13	2	119209-35030	O-RING, P11	1							
14	2	119125-39220	GASKET	1							
15	2	119260-42021	GASKET, WATER PUMP	1							
16	2	119275-42020	GASKET, WATER PUMP	1							
17	2	119125-42030	GASKET, WATER PUMP	1							
18	2	119209-42320	O-RING, P21 EPDM	1							
19	2	124465-44950	GASKET, 16	1							
20	2	119125-51800	GASKET	1							
21	2	129901-59560	GASKET	3							
22	2	22190-120002	WASHER, SEAL 12	5							
23	2	22190-160002	WASHER, SEAL 16	1							
24	2	23414-080000	GASKET, 8X1.0	1							
25	2	24311-000180	O-RING, 1AP18.0	2							
26	1	129400-92400	HONE	1							1
27	1	977770-1207F	GASKET.LIQUID	1							1

Remarks
(1)Optional parts.

N:Old ←Yes/No→ New. Q:Old ←No/Yes→ New. R:Old ←Yes/Yes→ New. S:Old ←No/No→ New. W:Add. Z:Discontinued. F:Interchangeable by set. K:Q'ty Change

Copyright (C) YANMAR CO., LTD. All RightsReserved.

Parts No. Index

Parts No.	Fig. No.	Ref. No.
101304-59020	14	2
101720-55750	14	17
102103-55520	14	12
103854-39140	14	1
104200-55321	14	8
104200-55330	14	9
104200-55341	14	10
104200-55750	14	18
105010-11230	4	28
105025-59760	14	28
105027-12580	5	6
105230-59510	14	25
105425-01690	3	6
106760-01770	2	6
	4	33
110250-55610	14	13
114110-07761	14	4
114250-39450	9	14
119000-59550	13	28
119025-51520	11	38
119125-01330	1	31
	17	2
119125-01500	2	1
119125-01750	2	2
119125-01760	3	5
119125-01780	3	9
119125-01790	1	32
	17	3
119125-01800	1	35
119125-01960	1	7
119125-01970	1	5
119125-02061	1	9
119125-02900	1	36
119125-02910	1	39
119125-02930	1	23
119125-02940	1	42
119125-11100	4	13
119125-11110	4	14
119125-11130	4	15
119125-11180	4	16
119125-11190	4	17
119125-11200	4	19
119125-11240	4	20
119125-11260	4	23
119125-11270	4	24
119125-11320	4	44
119125-11330	4	45
	17	4
119125-11340	4	18
	17	5

Parts No.	Fig. No.	Ref. No.
119125-11370	4	46
	17	6
119125-11380	4	34
119125-11650	4	27
119125-11740	4	4
119125-11800	4	57
119125-13110	6	1
	17	9
119125-13140	6	2
119125-14580	7	3
119125-21200	8	4
119125-21650	8	11
119125-21700	8	1
119125-22080	8	15
119125-22300	8	21
119125-22500	8	17
119125-22550	8	33
119125-22900	8	32
119125-23000	8	23
119125-25050	1	26
119125-25100	7	9
119125-25910	7	14
119125-25930	7	13
119125-32000	9	1
119125-34810	9	3
119125-34820	9	4
119125-34900	9	5
	17	12
119125-39200	9	11
119125-39220	9	12
	17	14
119125-42000	10	1
119125-42020	10	3
119125-42030	10	4
	17	17
119125-51030	11	6
119125-51060	11	7
119125-51100	11	9
119125-51241	11	16
119125-51250	11	17
119125-51300	11	19
119125-51370	11	24
119125-51481	11	35
119125-51491	11	36
119125-51700	11	79
119125-51800	1	34
	17	20
119125-51900	11	84
119125-59540	13	23
119125-59560	13	24

Parts No.	Fig. No.	Ref. No.
119125-59570	13	26
119125-59810	13	20
119125-59820	13	21
119125-59830	13	22
119125-61110	12	13
119125-61120	12	14
119125-61130	12	15
119125-61140	12	16
119125-61150	12	17
119125-61160	12	18
119125-61201	12	5
119125-61390	12	20
119125-61401	12	21
119125-61430	12	29
119125-61450	12	87
119125-61501	12	38
119125-77010	15	1
119125-77170	15	8
119125-77200	15	11
119125-77210	15	12
119125-77230	15	13
119125-77270	15	15
119125-77280	15	16
119125-77520	15	17
119125-77660	15	18
119125-77710	15	19
119125-77760	15	20
119125-77800	4	55
119125-77820	4	56
119125-92600	17	1
119127-01560	1	1
119128-01640	3	2
119128-01660	3	2 -1
119128-12050	5	1
119128-13510	6	8
119128-21560	8	8
119128-35080	9	9
119128-44520	10	36
119128-44570	10	37
119128-49030	10	47
119128-49040	10	48
119128-61300	12	11
119128-66710	16	35
119128-66820	16	38
119131-18320	6	5
119209-35030	9	8
	17	13
119209-42320	10	9
	17	18
119225-52102	14	5

Parts No.	Fig. No.	Ref. No.
119225-77721	16	41
119226-07900	4	53
119233-12700	5	9
119247-77100	16	40
119255-44660	10	45
119260-11270	4	25
119260-11280	4	26
119260-11370	4	1
119260-14200	7	1
119260-14400	7	2
119260-23910	8	29
119260-42021	10	12
	17	15
119265-44740	10	18
119266-01200	1	30
119275-42020	17	16
119305-35151	9	15
119336-12570	5	5
119446-39100	3	11
119446-66740	16	36
119446-66800	16	37
119515-12530	5	2
119515-13200	6	7
	17	10
119515-23601	8	27
119515-23611	8	30
119515-44600	10	39
119515-53001	13	1
119515-53010	13	3
119515-61440	12	30
119515-61560	12	95
119515-77010	15	1 -1
119527-61420	12	28
119527-61700	12	117
119540-77310	16	21
119600-11460	4	3
	17	8
119620-01620	1	13
119620-01750	3	3
119620-21941	8	13
119620-59700	13	30
119621-21681	8	12
119629-49080	10	52
119643-66900	16	39
119650-77911	16	42
119653-77950	12	118
119655-12560	5	4
119717-01800	2	3
119717-03031	4	35
119717-03070	4	36

Parts No. Index

Parts No.	Fig. No.	Ref. No.
119717-03070	4	37
119717-13600	6	3
119717-23200	8	26
119717-35140	9	6
119717-42350	10	16
119717-49800	10	22
119717-51150	11	13
119717-51190	11	15
119717-51420	11	27
119717-51500	11	37
119717-51570	11	43
119717-51711	11	80
119717-51750	11	81
119717-51761	11	82
119717-51860	11	94
119717-51930	12	2
119717-61050	12	3
119717-61060	12	86
119717-61070	12	4
119734-02220	1	33
119802-03100	4	38
119802-03110	4	39
119802-03121	4	40
119802-03131	4	41
119802-03141	4	42
119802-13620	6	4
119802-44560	10	42
119802-55801	14	22
119808-12540	5	3
119840-59570	13	29
119865-21600	8	10
119934-55611	14	6
119940-77270	16	20
121111-21501	8	7
121250-44590	10	43
121250-44901	10	27
121256-44600	10	44
121257-55720	14	14
121257-55731	14	15
121450-42450	10	26
121450-44531	10	32
121470-44581	10	34
121550-49111	10	54
121575-66830	12	67
122710-51090	11	8
124060-01050	1	4
124064-55510	14	11
124066-59100	13	27
124101-49531	10	21
124195-77770	15	21

Parts No.	Fig. No.	Ref. No.
124450-44550	10	41
124450-44560	10	33
124465-44950	10	28
		29
	17	19
124550-51350	11	23
124574-59090	14	24
124593-78500	16	47
124764-44810	10	46
124766-49160	10	55
124766-59050	10	58
		61
	14	23
126650-12680	5	8
128990-51330	11	22
129008-61301	12	70
129100-01580	3	1
	8	2
129100-51560	11	42
129100-51570	11	44
129100-52200	11	98
129100-61650	12	61
129107-44590	10	38
129150-25301	7	12
129150-49080	10	50
129150-49100	10	49
129150-59120	13	15
129150-59131	13	18
129155-51020	11	5
129155-51140	11	12
129155-51280	11	18
129155-51400	11	25
129155-51530	11	39
129155-51540	11	40
129155-51550	11	41
129155-51580	11	46
129155-51591	11	47
129155-51600	11	48
129155-52051	11	97
129155-61341	12	71
129155-61460	12	72
129155-61480	12	32
129155-61830	12	66
129155-77925	16	45
129156-61460	12	31
129209-61370	12	19
129209-61920	12	74
129209-61930	12	75
129209-61970	12	76
129210-49240	10	56

Parts No.	Fig. No.	Ref. No.
129210-49280	10	59
129211-77920	16	46
129255-61410	12	27
129335-55701	14	7
129400-92400	17	26
129457-44760	10	19
129486-61540	12	57
129612-12650	5	7
129612-59520	14	27
129698-77110	15	2
129698-77120	15	3
129698-77130	15	4
129698-77140	15	5
129698-77150	15	6
129698-77161	15	7
129698-77180	15	9
129698-77190	15	10
129698-77250	15	14
129795-01900	16	1
129900-32040	1	27
	17	11
129901-11450	4	2
	17	7
129901-53800	13	4
129901-59560	13	25
	17	21
129972-77341	16	22
158552-61900	12	73
158600-51170	11	14
158600-51410	11	26
158600-51420	11	28
158600-51442	11	29
158600-51570	11	45
158600-51790	11	83
170121-59510	14	26
171056-49120	10	25
171064-44510	10	30
171081-55910	14	19
171301-77201	16	2
174307-51700	12	39
183012-66020	16	32
183012-66030	16	33
183012-66040	16	34
183366-08351	3	10
194155-52160	16	29
194215-52110	16	24
22190-100002	12	77
22190-120002	12	78
	13	31
	14	3

Parts No.	Fig. No.	Ref. No.
22190-120002	17	22
22190-160002	3	8
		12
	11	85
	17	23
22217-120000	11	86
22242-000100	4	31
22252-000200	8	22
22272-000030	12	68
22351-030010	8	14
22351-050010	11	87
22351-060012	1	28
22372-040000	12	79
22512-040120	8	5
22857-500100	4	47
		48
23000-022000	3	13
23000-060000	5	10
23010-038000	10	62
23061-061000	10	63
23065-070225	10	35
23080-007000	10	64
23414-080000	10	13
	17	24
23414-120016	12	80
23418-060000	14	20
23876-005000	1	10
	4	11
24101-060034	11	88
24101-063034	11	89
24104-062010	16	6
24311-000180	2	7
	4	50
	17	25
24311-240100	14	21
24316-000150	11	90
25132-003500	10	17
26014-060122	10	40
26022-050122	11	91
26106-050102	11	92
26106-060102	9	10
		13
	12	81
26106-060122	7	8
26106-060142	9	2
	12	82
26106-060202	4	51
	12	83
26106-060402	1	29
26106-060452	10	20

Parts No. Index

Parts No.	Fig. No.	Ref. No.
26106-060452	12	84
26106-060802	4	52
26106-080122	10	14
26106-080162	4	54
26106-080202	16	23
26106-080252	10	23
26106-080352	2	4
26106-080452	2	5
	4	32
	10	15
26106-080652	10	24
26106-100182	16	48
26106-100252	15	22
26206-100252	3	4
26306-080002	6	6
26306-100002	16	19
26476-060202	4	49
26577-060122	10	10
26716-120002	11	93
26756-060002	12	85
26856-060002	4	30
27241-220000	10	11
27241-300000	1	11
27241-350000	4	12
27241-450000	1	12
27260-120000	12	69
719128-51320	11	1
977770-1207F	17	27
X0280210331	15	20 A
X0280626010	15	20 K
X0280996180	15	20 C
X0281007680	15	20 B
X0282005871	15	20 D
X0283006960	15	20 E
X0284105040	15	20 F
X0284525010	15	20 H
X0285007030	15	20 J
X0285105190	15	20 M
X0285205030	15	20 N
X0286105010	15	20 P
X0286305010	15	20 R
X0286355010	15	20 S
X0287405140	15	20 T
X1280330020	15	20 U
X1289510130	15	20 V
X2534000090	15	20 W
X2A07073KA	16	4
X3A08877KA	16	12
X417878	16	9
X4284001590	15	20 X

Parts No.	Fig. No.	Ref. No.
X4A07023KB	16	5
X4A07403K01	16	15
X9055715000	15	20 Z
X9490065670	15	21 A
X9490138090	15	21 B
X9490138100	15	21 C
X9490138110	15	21 D
X9490423520	15	21 E
X9490560750	15	21 F
X9490562360	15	21 G
X9490721360	15	21 J
X9491034320	15	20 Q
X9491034330	15	20 G
X9491040990	15	20 L
X9491050100	15	20 Y
XM069000000	16	8
XM08137	16	3
XM219230000	16	17
XM329830000	16	7
XM67935	16	13
XM721740000	16	14
XM860250000	16	16
XM863720000	16	18
XYSPS400800	16	11
XYSPS402400	16	10

Parts No.	Fig. No.	Ref. No.

Parts No.	Fig. No.	Ref. No.